JLX3D
WHITE PAPER
SERIES

4 STEPS TO CREATE MODERN WORK INSTRUCTIONS

Overview

Technical communication technology is helping manufacturers create and share a new and dynamic breed of work instructions that promotes quality, reduces errors, and maximizes information retention. This paper identifies how a next generation of Technical Communication Software is helping leading organizations simplify the documentation creation process, while reducing manufacturing time and cutting costs.

In almost every business and organization, electronic documents are replacing their paper-based counterparts. This shift positively impacts a variety of traditional product communication deliverables because of the greater flexibility that electronic documentation products offer. With the ability to leverage both 2D and 3D technical illustrations and animations, electronic technical documentation can be considerably more efficient and effective. While these benefits can be recognized across all documentation requirements, manufacturing work instructions benefit significantly from the improved content creation and delivery capabilities.

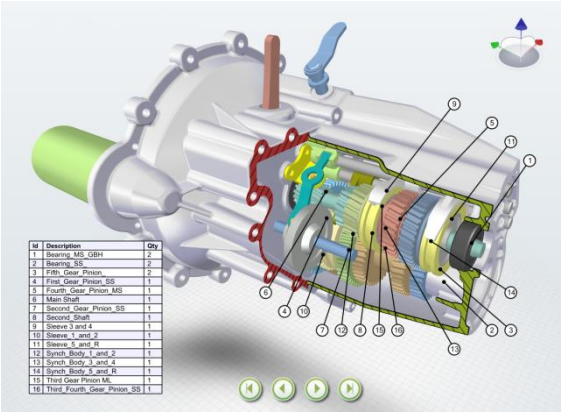

Traditional delivery mechanisms (think paper drawings) are also giving way to new technologies such as interactive web players, mobile devices, and augmented reality, making it possible to engage users with content in more effective and captivating ways. As a result, modern documentation is rapidly advancing to help organizations better communicate technical information internally and externally. With an emphasis on visual and interactive communication, organizations can leverage these tools to ensure that the delivery of clear product documentation is usable by technical and non-technical users alike.

Today's Work Instructions

Manufacturing work instructions are the key tools to help workers comprehend the sequence of steps required to assemble, disassemble, or repair a product. The challenge, however, is that products are rapidly becoming more complex, making it more difficult to produce work instructions that are precise, up-to-date, and clear. When a product is manufactured or serviced improperly, the impact on the organization is tremendous and the poor quality is realized through low yield rates, cost overruns, and customer dissatisfaction. Therefore, it is critical to provide high quality work instructions that make it possible to realize the improved manufacturing efficiency, while enhancing the perceived value of the product, and fostering customer satisfaction.

Modern Technical Communication

3D engineering software continues to evolve with the primary focus on providing more robust design and analysis capabilities and integrating data with product lifecycle management (PLM) systems.

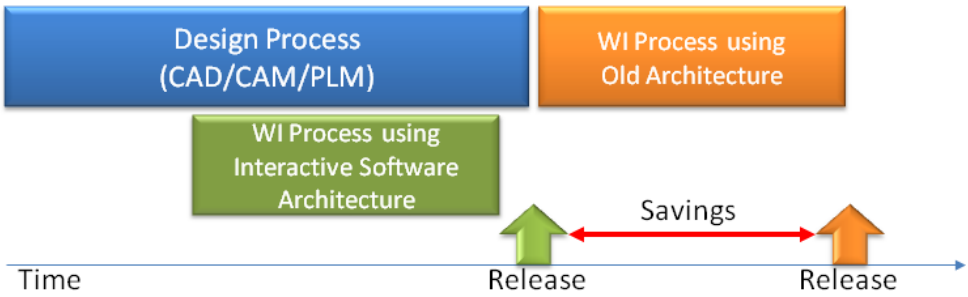

This leaves a noticeable gap in the technology to support manufacturing and servicing documentation. To fill this gap, a new generation of “technical communication” software has emerged. These tools are designed to complement 3D CAD systems with the content authoring and playback tools necessary to support a variety of product deliverables. Synchronizing the content creation methods with the design process, technical communication software has enabled manufacturing and servicing to begin developing work instructions early in the design process, without maintaining dependencies on engineers and designers to create visuals.

To support both iterative and creative needs, technical communication software should be easy-to-use and enable efficient work practices while still promoting advanced functionalities to address the four main steps in the authoring workflow.

Step 1: Importing 3D Data

Working with the original 3D product design data is critical. Using existing 3D CAD data ensures that technical product communications are exact and it provides content creators the flexibility to present instructions in the clearest way possible. However, working with original CAD data can present some challenges, including ensuring high-performance when working with large file sizes and understanding the nuances of proprietary file formats. Therefore, a capable 3D work instruction authoring tool supports importing a variety of file formats and sizes, while optimizing the imported data for use in technical communications. Optimizing the 3D design data allows authors to adjust the number of polygons for peak performance while maintaining the quality and the integrity of the original model (including part number references). The import capabilities must be able to read industry-standard and proprietary CAD formats, and provide the ability to merge multiple 3D data sets into the same document. The challenge is well defined by this quote from a recent interview:

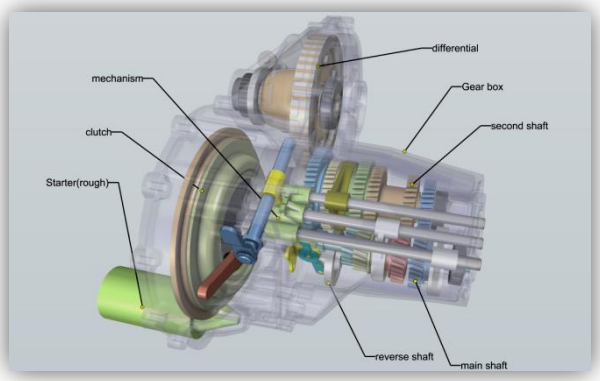

> *“Optimizing the 3D models data flow is a key point for our new project the daily work is done by 50 different suppliers using different software for CAD and Virtual Simulation, the technical documentation software must be able to merge information_with all the references to guarantee a high level of traceability.” – commented an* ***Information Director at a Large Aerospace Company***

Step 2: Content Creation

No two work instructions are exactly alike, making it necessary for content creators to have a wide range of tools to support individual documentation requirements. Some of the key tools required for rapid creation of work instructions include; organizing procedures by views, creating associative BOM tables, annotating parts to company standards, producing high quality vector line art, rendering high resolution images and developing interactive 3D animations, all in a way that clearly communicates information to both technical and non-technical end-users.

Step 3: Validation

Effective work instructions must clearly indicate the order of operation for each task performed. Establishing the order of the operations requires careful determination based upon various assembly configurations. Before this information can be publishing to the field, content creators must validate each work instruction in a detailed review process with engineering and manufacturing teams. As such, an effective authoring tool must provide the functionality required to review multiple work instruction scenarios according to the latest design configurations as illustrated in the following quote:

> *“Due to business pressure, when creating a new product process, we start the documentation process at the same time. This allows us to quickly validate our design process in regard to the mounting process. With this new method we reduce the assembly preparation time by 50%.” – explained the* ***Documentation Manager of a Car Manufacturer Company***

Step 4: Publishing

With the evolution of electronic documents, content creators can generate work instructions for delivery across commonly used 2D and 3D formats, including Microsoft® Office, PDF, U3D, SVG, XML or Video. Specific file formats are also available that provide additional benefit and capabilities when paired with a dedicated viewer, or embedded into an application to deliver a more dynamic user experience. Large manufacturers are increasingly adopting the dedicated viewer and embedded application delivery model as a way to distribute work instructions. Combining 2D (text and data) with 3D illustrations and animations provides a more direct way to distribute information, while also channeling content into a single source for better versioning control and updates.

Dedicated players offer a wider range of playback and interaction capabilities than what is available from a basic 3D viewer, such as 3D PDF. They provide more advanced tools that enable users to interact with the model through advanced viewing capabilities, cutting planes, and customizable rendering priorities, to improve user comprehension of an assembly or work instruction. 3D animations show clear step-by-step work instructions that make it easier to learn.

These modern technical communication applications are driving a variety of proven benefits for content creators and their organizations. Applications that fall into this category include a short learning curve, the ability to automatically integrate design and engineering changes into associated technical communications, a dynamic range of 2D and 3D output options for use on the shop floor and elsewhere, and an overall increase in technical communication quality. This translates into enhanced productivity and the flexibility required to meet diverse business needs.

One manufacturer explained the benefits of modern technical communication this way:

> *"3D animations that are interactive better demonstrate complicated field service scenarios. We don't really distribute anything on paper anymore and we don't have to manufacture nearly as many prototypes, and that significantly reduces the resources we use." – stated a* ***Work Instruction Engineer at a Large Truck Manufacturer***

3D Communication is Worth a Millions Words

With the success of 3D software in design, engineering and entertainment, the next generation of workers is more accustomed to seeing and interacting in 3D. This could be from an experience using a 3D game or from working with a 3D model directly on the shop floor. Either way, workers are increasingly embracing interactive 3D experiences for a more meaningful understanding of product attributes, whether it's how to use a product, how to assemble it or how to service it.

Recent studies confirm that 3D technology is more successful in educating workers on new tasks. Compared to learning tools based on text and 2D images, 3D applications provide for a shorter learning curve along with an improved understanding regardless of the complexity of the task. Quite simply, the ability to interact with a 3D model results in a remarkable performance improvement for a production employee. The organizational benefits of deploying 3D work instructions are realized from three main areas; 3D applications make learning easier, offer higher quality deliverables and improve collaboration.

Easy to Learn

- Communications provided in 3D are better understood and more easily retained, resulting in a reduction in learning curve.
- 3D model based instructions make training more effective without the need to have the actual product.
- Clear visual communications addresses all languages.

Quality for Production

- 3D interactive animations better demonstrate complicated manufacturing and field service scenarios.
- Mistakes during assembly processes are reduced while improving shop floor execution time.
- Service and work instructions include up-to-date product information for all steps in the process.

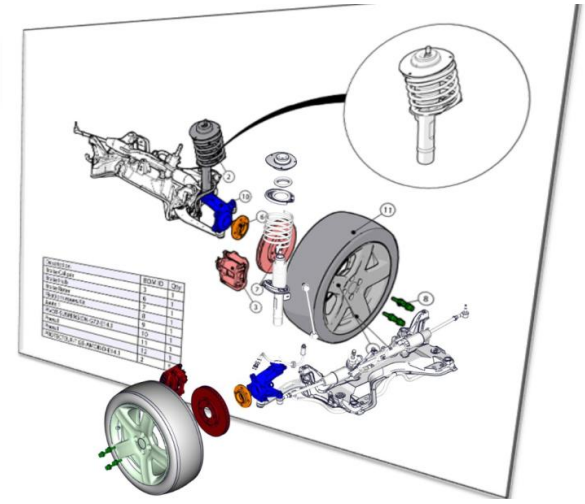

Collaboration

- Lightweight 3D data embedded in Work Instruction documents provide clear product communications and easily facilitate knowledge exchange.
- Reduce time and travel costs by electronically delivering work instructions.
- A standard template with embedded 3D data simplifies data exchange with suppliers and improves product understanding.
- 3D communications provide better aftermarket support materials to customers and service providers worldwide, saving time and improving quality.

Work Flow Integration

Today, the efficient production of Work Instructions is critical to meeting aggressive time-to-market goals. Organizations need to manage the traceability of source information and automate updates and part changes in the Work Instructions production process. For successful integration, the 3D Technical Communication software has to be flexible and provide a wide range of capabilities, including robust 3D import capabilities, automation, and an application programming interface.

Data Exchange

Manufacturers use a variety of CAD applications, each with their own 3D data formats. Work Instructions require importing multiple models from a mix of sources. However, each CAD format defines geometry uniquely making the task of maintaining data integrity during data exchange difficult. Modern Work Instruction applications import a variety of CAD file formats, but must also be capable of merging different CAD formats in the same scene while keeping the correct dimensions and all the relevant metadata, such as part numbers and references. This capability is especially important for organizations with large CAD assemblies and parts originating from disparate CAD applications.

Automation

Automation requires an Information System Architecture and tools with a broad set of functionalities to properly match and select relevant information for each data exchange. 3D Technical Communication software makes automation possible when it provides programmable tools or an interface for external controls to the software capabilities. Connected to the Information System, a synchronization module can perform automatic updates for any CAD model modification through a batch operation. The procedure can be based on a CAD database or a file system.

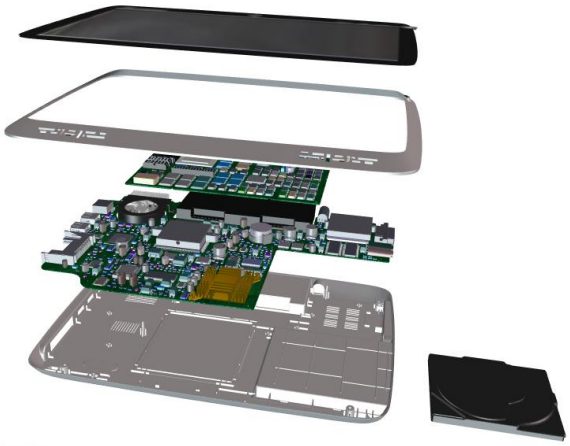

Measurable Benefits

Manufacturing companies that use an integrated 3D Technical Communication app versus a "disconnected" application reduces implementation cycle times by an average of 50% and up to 95% for a complex information system. The workflow integration can easily save 25% of engineering costs. In production, up to 50% reduction in assembly preparation, and up to 15% reduction in execution time. In fact, one large car manufacturer offered the following compelling information:

> *"For a long time, our validation process was made using physical model. When we changed to a Virtual Validation Process, we included Work Instruction Software in the process. We quickly observed benefits in product quality, and are able to make virtual assembly and installation tests and cover more variants while reducing our risks of worker's accident when testing real model." – explained by* ***Quality Engineer of a Large Car Manufacturer***

Next Step: Mobility

Recent advances in information technology have opened the doors for new uses of Work Instructions. The "traditional" use of Work Instructions makes it possible for the end-user to consult and interact with the information on a shop floor workstation. Because the worker must go to the stationary computer to see the instructions, there is a stoppage in the procedure in progress.

Of course, some procedures can't be stopped, think joining or welding, so the work instructions cannot be accessed once the task has begun. Mobile technologies make it possible to eliminate this problem. The use of autonomous, ruggedized tablets, which are suitable for the shop floor, enables the information to be closer to the user. New ergonomic solutions, such as the use of a touch screen or a pen, permit the operator to very simply navigate into the Work Instruction; however, these solutions require the use of hands which may be needed for the work itself. A complementary approach may lie in the use of vocal commands which allow the activation of the interface while keeping the hands free for the task. Mobile devices are in use today on the shop floor as described by the quote below:

"In 2010, we made a study to improve the Work Instruction consultation and collaborative method, using a ruggedized tablet on the Shop Floor – which was a real challenge. After one year of user centric studies and tests with the workers, we deployed a collaborative solution based on a Wi-Fi tablet using a pen and a vocal command system with a limited instruction set. Today, worker's use the system daily to access Work Instructions, thereby reducing the errors and allowing teams to leave documented processes for the next team; as we work seven days a week, twenty four hours a day." - explained a ***Technology Method Manager of an Aerospace Motor Repair Company***

Conclusion

Major advances have been made in the Work Instructions process for both interactive 2D and 3D representation. This coupled with innovative software technologies makes the migration from paper Work Instructions to Interactive Model Based Instructions more practical and affordable for a wide range of companies. Operational efficiency is improved with the availability of interactive players and update automation process which provide real-time delivery of accurate information to the field, guaranteeing integrity and traceability throughout the product development lifecycle. The integration of the documentation creation process simultaneously with the design and engineering development make 3D Technical Communication software a keystone to meet organizational needs.